MENTAL HEALTH DOORS

SYSTEM: Forster Presto Steel Framed System

Incorporating the Forster Presto non-insulated steel framing system, these doors and windows are specifically designed for mental health and high security scenarios where a high level of security is required.

Highly suited for mental health wards at hospitals and to create an aesthetically unobtrusive separation between areas while reducing potential ligature points with the inclusion of fully concealed closers, hinges, and door furniture.

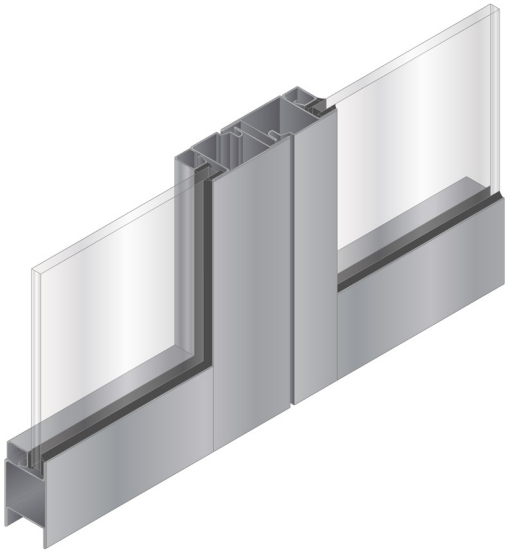

FEATURES

- Single leaves, double leaves, fixed panes
- Forster presto architectural / security profiles
- Fully welded steel
- Fully concealed anti-ligature closer
- Fully concealed anti-ligature hinges
- Fully concealed electric strikes
- Compatible with local and European lock systems
- Compatible with anti-ligature D-pull and turn snibs
- Glass thickness up to 30mm
- Available with -/60/60, -/90/90, or -/120/120 (fixed panes only)
- Full G2 ballistic upgrade options
- Curved heads, angles, circles available.
- Available in powder coat, paint finish, or 304 grade Stainless steel finish

Technical Protection Systems
2/21 Malvern Street, Bayswater, VIC, Australia
P +61 3 9720 1930 **F** +61 3 9720 1929
E sales@technicalprotection.com.au

technicalprotection.com.au

Data Sheet: TPS-DS-014
Date: 02/2026

TPS reserves the right to change specifications and technical performance without prior notice

TPS TECHNICAL PROTECTION SYSTEMS

MENTAL HEALTH DOORS

Healthcare System

Doors and fixed glazing separating a nurse's station from the client areas at a high dependency mental health ward in Melbourne. This project used standard anti-ligature door furniture combined with fully concealed door closers and hinges. Doors and fixed panes were used both internally and externally to ensure maximum security without sacrificing natural light or client safety.

HOW TO SPECIFY

Door and fixed glazing to be TPS Mental health system incorporating forster Presto steel frame with 14mm attack glass, including fully concealed closer, fully concealed hinges, and anti-ligature door furniture* (specify desired door furniture if required). Doors available from Technical Protection Systems approved distributions network.
Contact Technical Protection Systems Pty Ltd for further information:
W technicalprotection.com.au **P** 03 9720 1930 **E** info@technicalprotection.com.au

Technical Protection Systems
2/21 Malvern Street, Bayswater, VIC, Australia
P +61 3 9720 1930 **F** +61 3 9720 1929
E sales@technicalprotection.com.au

technicalprotection.com.au

TPS reserves the right to change specifications and technical performance without prior notice

TPS TECHNICAL PROTECTION SYSTEMS

CONCEALED DORMA ITS96 CLOSER

CONCEALED DORMA ITS96 CLOSER

CONCEALED FORSTER HINGE

STANDARD FORSTER LEVER HANDLE

ANTI LIGATURE D-PULL HANDLE

RETRO-FIT SOLUTION

Technical Protection Systems
2/21 Malvern Street, Bayswater, VIC, Australia
P +61 3 9720 1930 **F** +61 3 9720 1929
E sales@technicalprotection.com.au

technicalprotection.com.au

TPS reserves the right to change specifications and technical performance without prior notice

TPS TECHNICAL PROTECTION SYSTEMS

TYPICAL CONFIGURATIONS

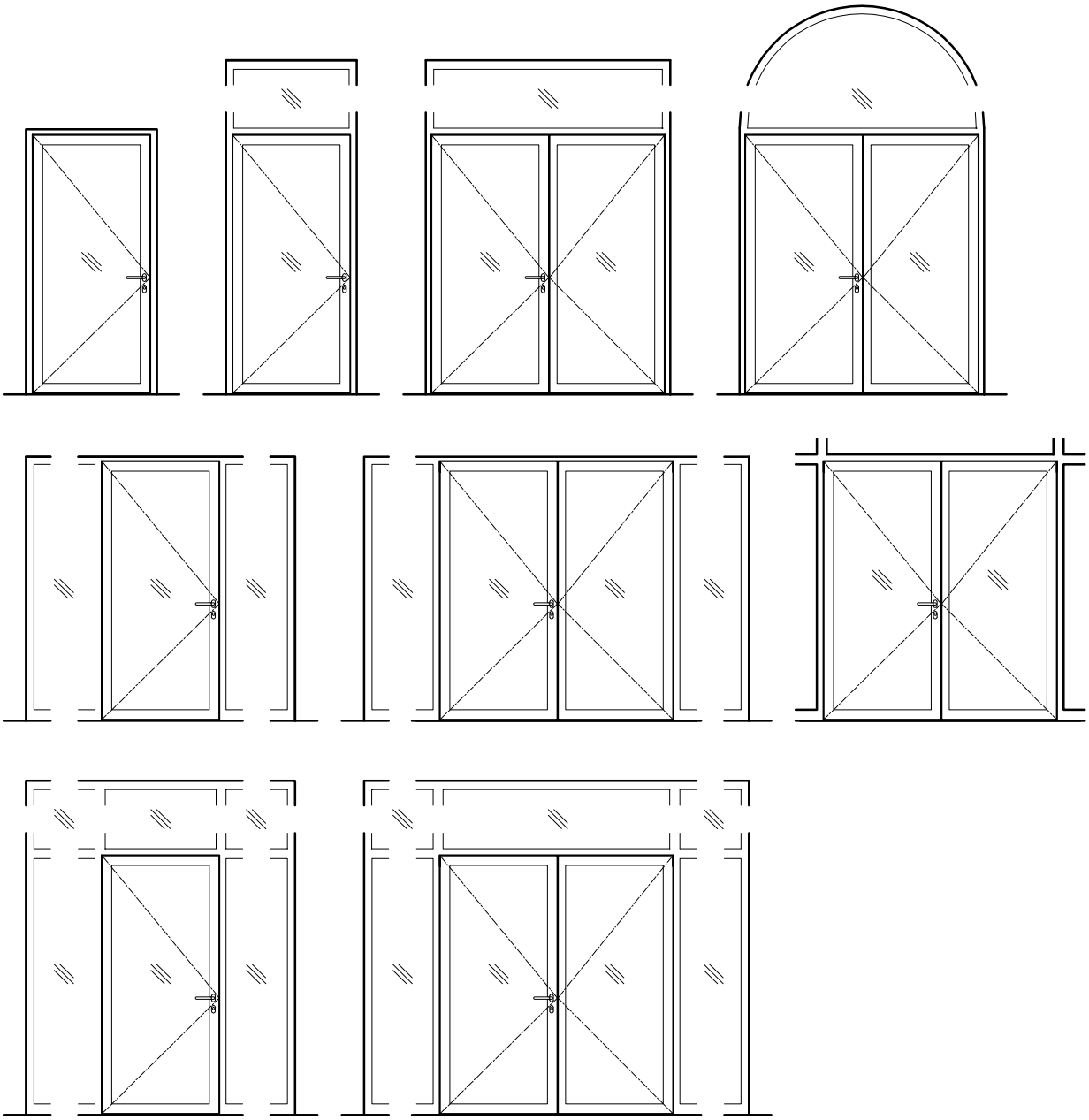

Technical Protection Systems
2/21 Malvern Street, Bayswater, VIC, Australia
P +61 3 9720 1930 **F** +61 3 9720 1929
E sales@technicalprotection.com.au

technicalprotection.com.au

TPS reserves the right to change specifications and technical performance without prior notice

TPS TECHNICAL PROTECTION SYSTEMS

MENTAL HEALTH SINGLE LEAF DOOR

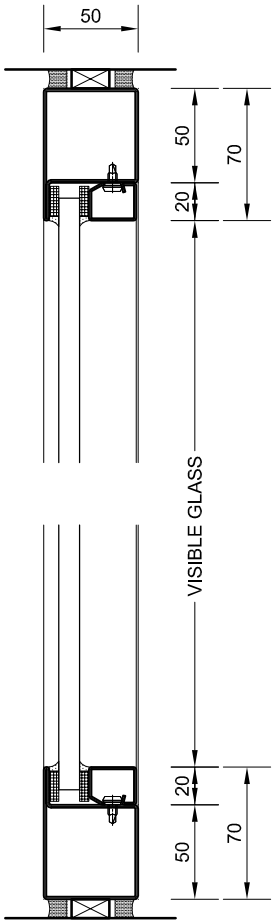

TYPICAL VERTICAL SECTION A - A

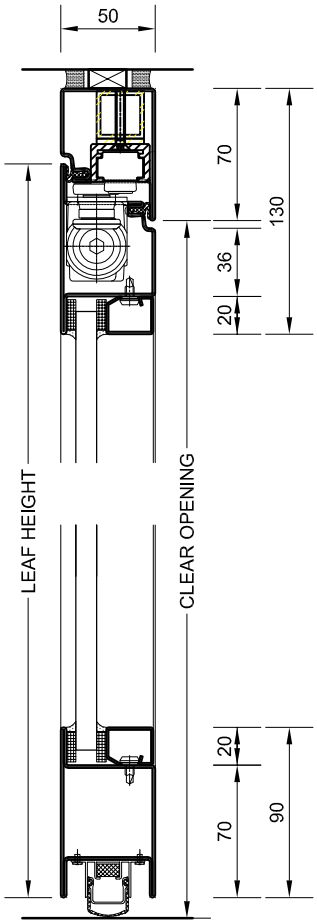

TYPICAL VERTICAL SECTION B - B

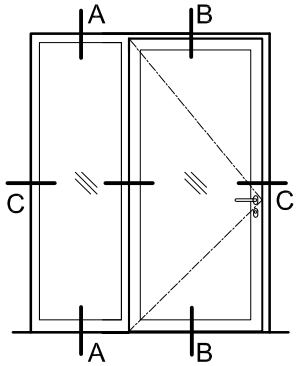

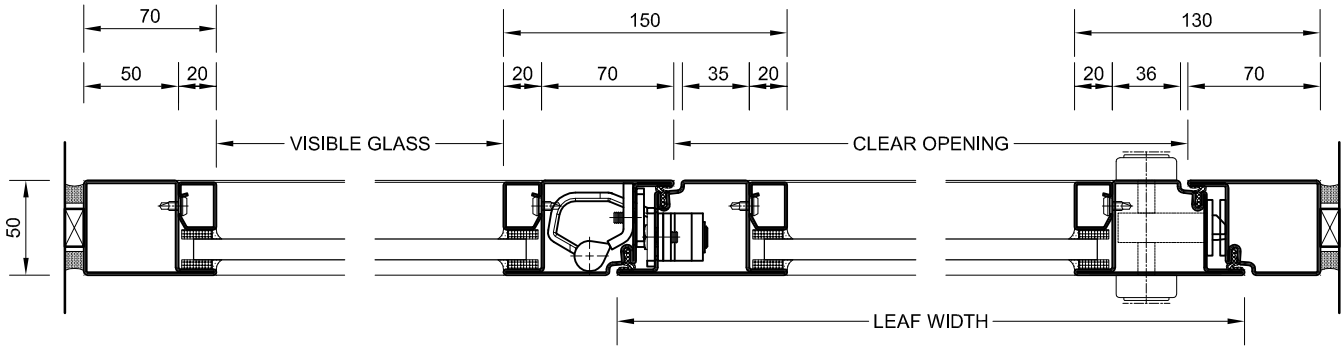

TYPICAL HORIZONTAL SECTION C - C

Technical Protection Systems
2/21 Malvern Street, Bayswater, VIC, Australia
P +61 3 9720 1930 **F** +61 3 9720 1929
E sales@technicalprotection.com.au

technicalprotection.com.au

TPS reserves the right to change specifications and technical performance without prior notice

TPS TECHNICAL PROTECTION SYSTEMS

MENTAL HEALTH DOUBLE LEAF DOOR

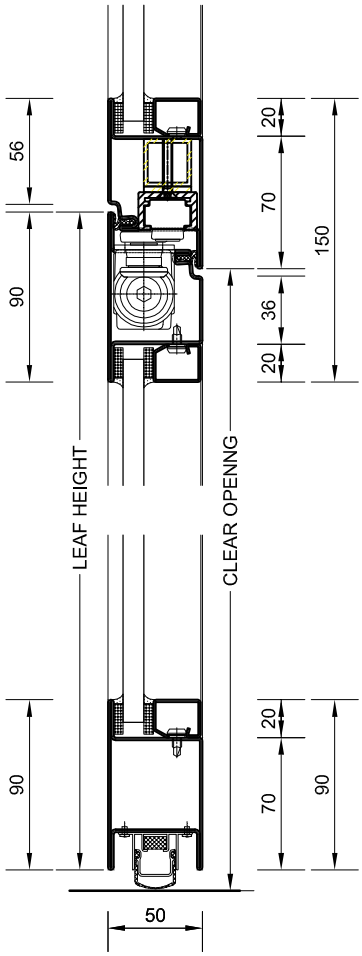

TYPICAL VERTICAL SECTION D - D

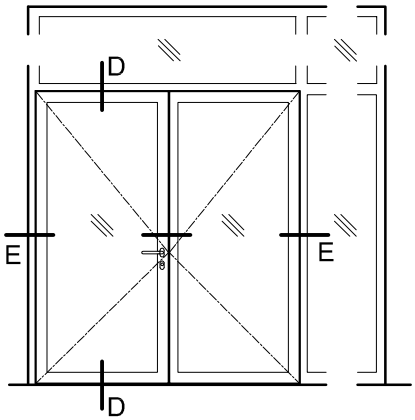

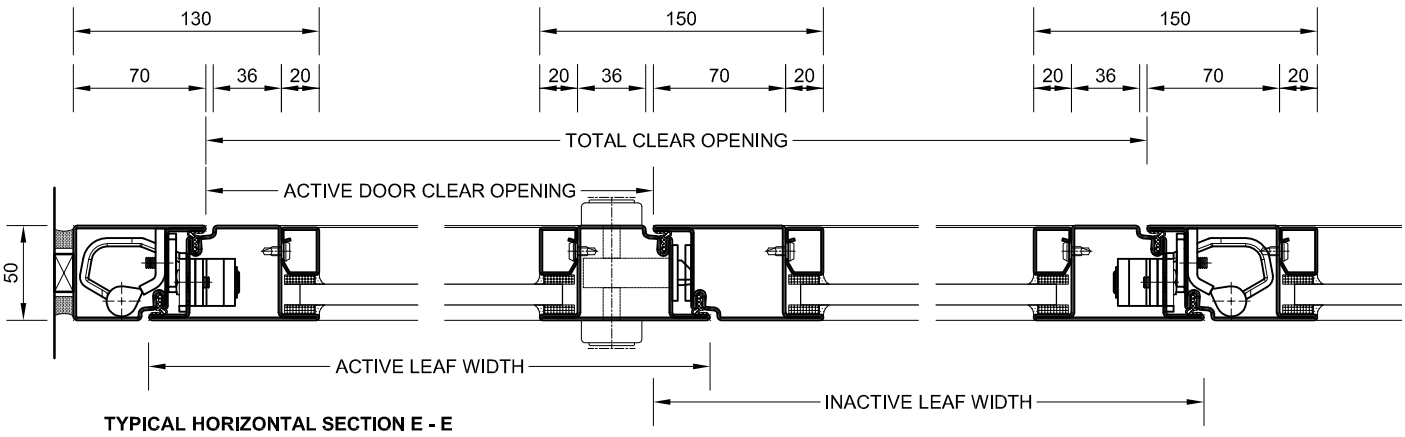

TYPICAL HORIZONTAL SECTION E - E

Technical Protection Systems
2/21 Malvern Street, Bayswater, VIC, Australia
P +61 3 9720 1930 **F** +61 3 9720 1929
E sales@technicalprotection.com.au

technicalprotection.com.au

TPS reserves the right to change specifications and technical performance without prior notice

TPS TECHNICAL PROTECTION SYSTEMS

DETAILED CONFIGURATION

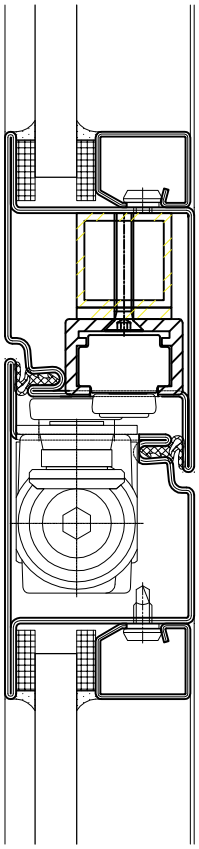

FULLY CONCEALED DORMA ITS-96 CLOSER

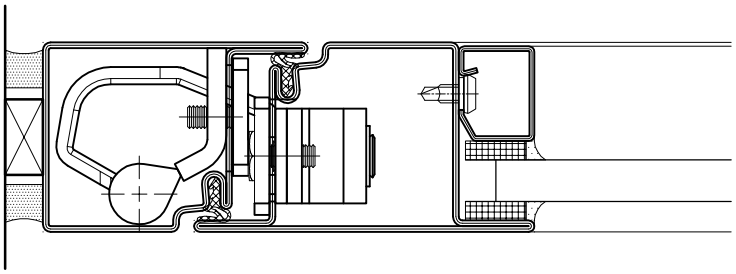

FULLY CONCEALED FORSTER HINGE 917611

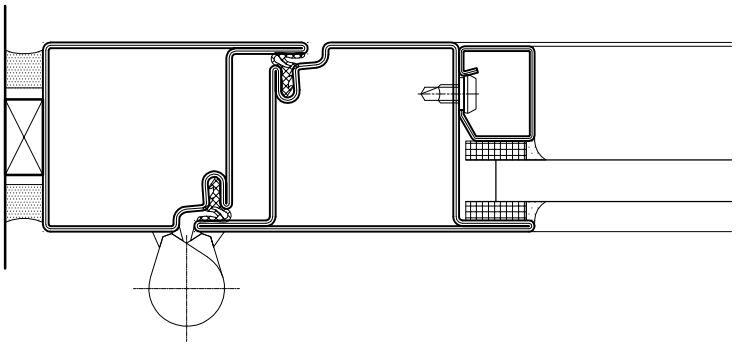

WELD ON FORSTER HINGE 907662

Technical Protection Systems
2/21 Malvern Street, Bayswater, VIC, Australia
P +61 3 9720 1930 **F** +61 3 9720 1929
E sales@technicalprotection.com.au

technicalprotection.com.au

TPS reserves the right to change specifications and technical performance without prior notice

TPS TECHNICAL PROTECTION SYSTEMS

TYPICAL RETRO-FIT CONFIGURATION

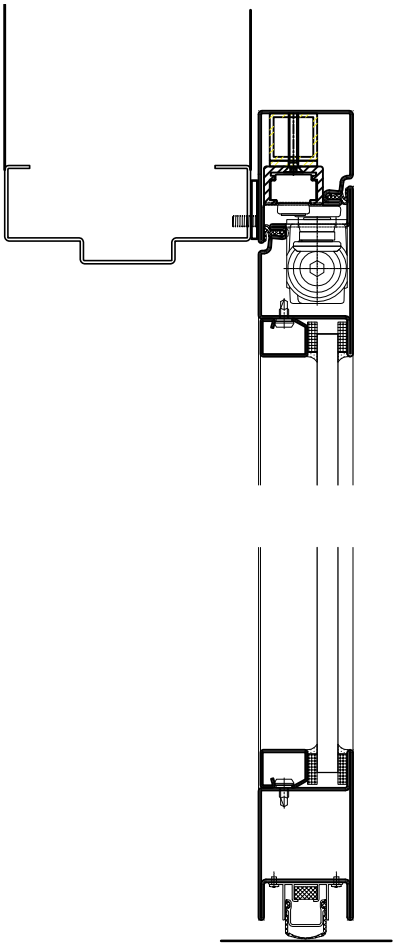

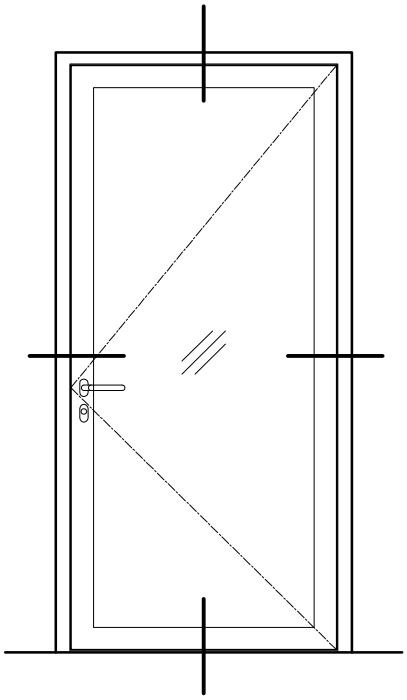

TYPICAL VERTICAL SECTION

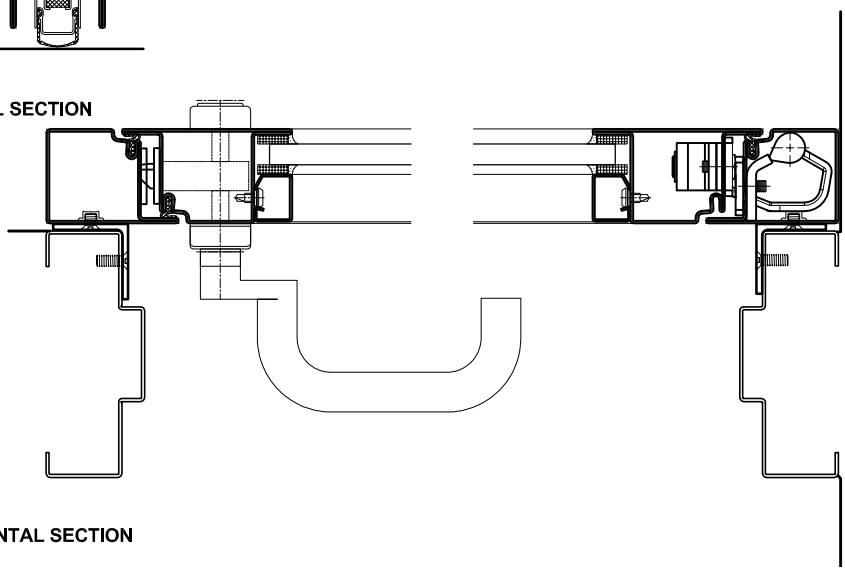

TYPICAL HORIZONTAL SECTION

Technical Protection Systems
2/21 Malvern Street, Bayswater, VIC, Australia
P +61 3 9720 1930 **F** +61 3 9720 1929
E sales@technicalprotection.com.au

technicalprotection.com.au

TPS reserves the right to change specifications and technical performance without prior notice

TPS TECHNICAL PROTECTION SYSTEMS